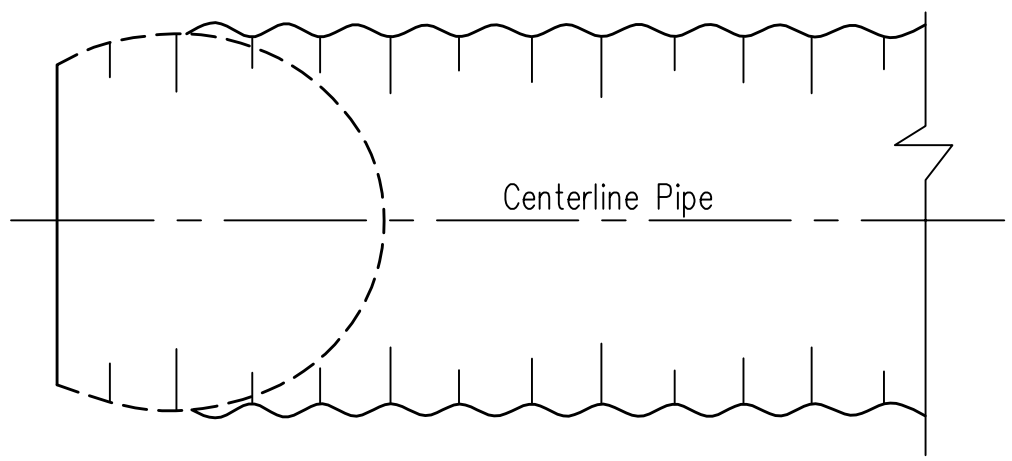

PLAN

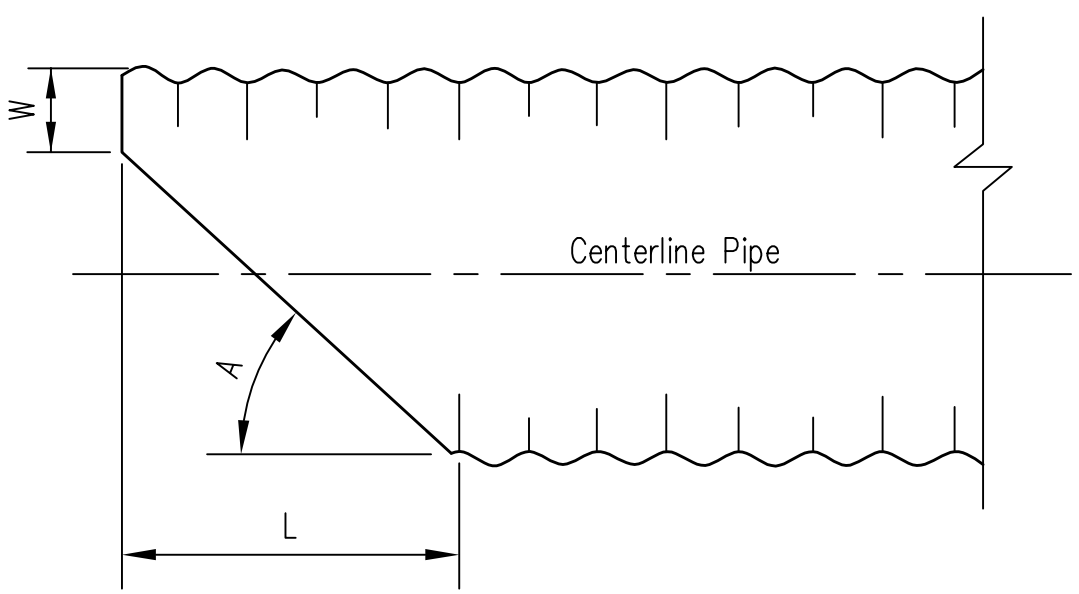

SIDE ELEVATION

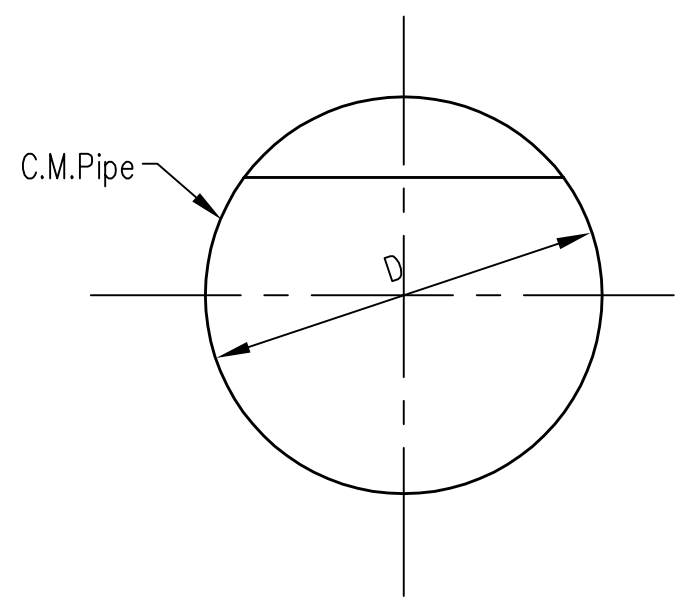

FRONT ELEVATION

Pipe Dia. D, Inches	Pipe Slope Percent	End Plate Width, W Inches	Canopy Length, L Inches	Canopy Cut Angle A, Degrees
6	0–5	1 1/8	3 1/4	56
	5.1–15	1 1/4	4 7/8	45
	15.1–25	1 5/8	6 5/8	33
	25.1–32	2 1/8	7 7/8	26
8	0–5	1 1/2	4 3/8	56
	5.1–15	1 5/8	6 3/8	45
	15.1–25	2 1/8	8 3/4	33
	25.1–32	2 7/8	10 3/8	26
10	0–5	1 7/8	5 3/8	56
	5.1–15	2	8	45
	15.1–25	2 5/8	11	33
	25.1–32	3 1/2	13	26
12	0–5	2 1/4	6 1/2	56
	5.1–15	2 3/8	9 5/8	45
	15.1–25	3 1/4	13 1/4	33
	25.1–32	4 1/4	15 5/8	26
15	0–5	2 7/8	8 1/8	56
	5.1–15	3	12	45
	15.1–25	4	16 1/2	33
	25.1–32	5 1/4	19 1/2	27
18	0–5	3 3/8	9 3/4	56
	5.1–15	3 5/8	14 3/8	45
	15.1–25	4 7/8	19 3/4	33
	25.1–32	6 1/4	23 3/8	27
24	0–5	4 1/2	13	56
	5.1–15	4 3/4	19 1/4	45
	15.1–25	6 1/2	26 3/8	33
	25.1–32	8 3/8	31 1/4	27

NOTES:
All cuts shall be saw or shear cuts.
All galvanizing damaged by cutting, drilling or welding shall be repaired.

Date
Designed
Drawn M. QUINONES 10/01
Checked
Approved

CANOPY INLET FOR C.M. PIPES
DETAILS FOR FABRICATION

NRCS
Natural Resources Conservation Service
United States Department of Agriculture

File No.
IL-ENG-202B
Drawing No.

Sheet 2 of 2

AUTOCAD2000

Landowner		Location	