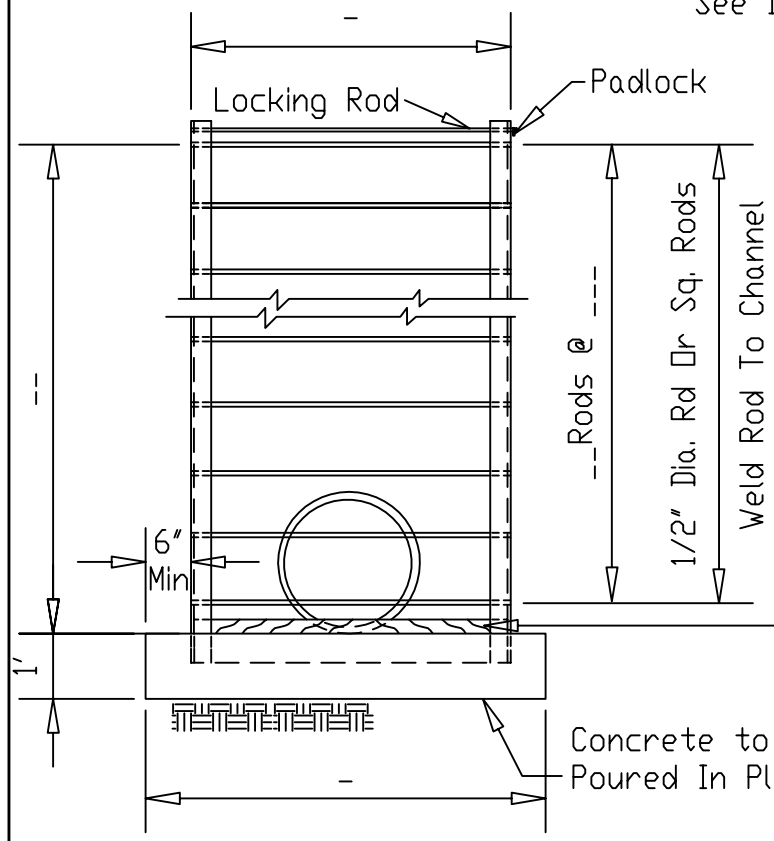

FRONT ELEVATION

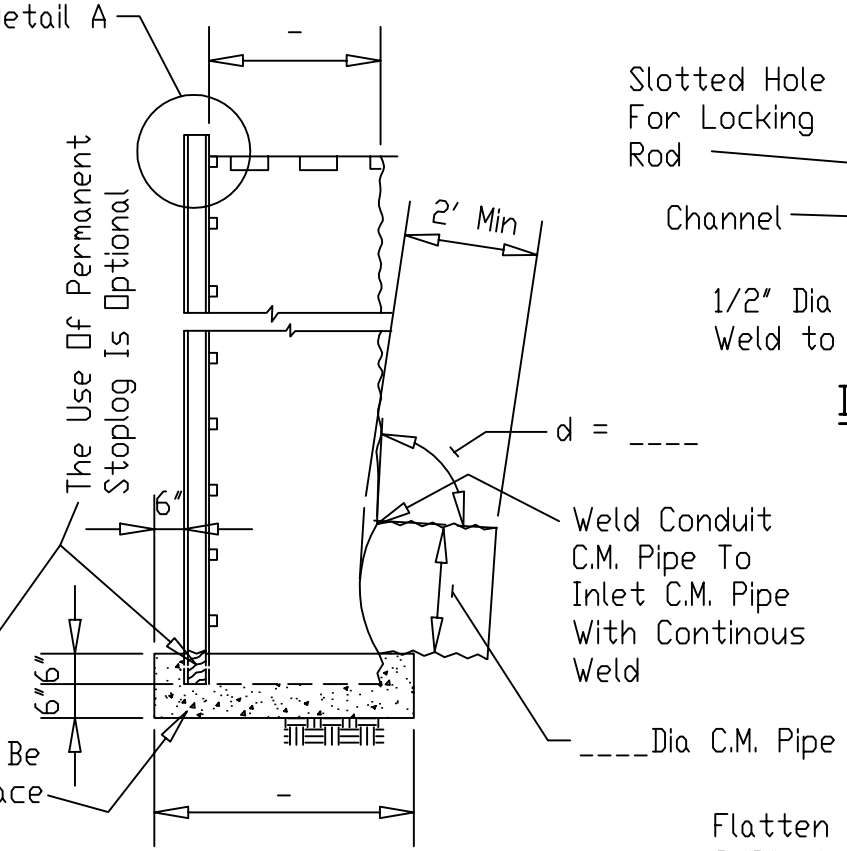

SECTION @ CENTERLINE

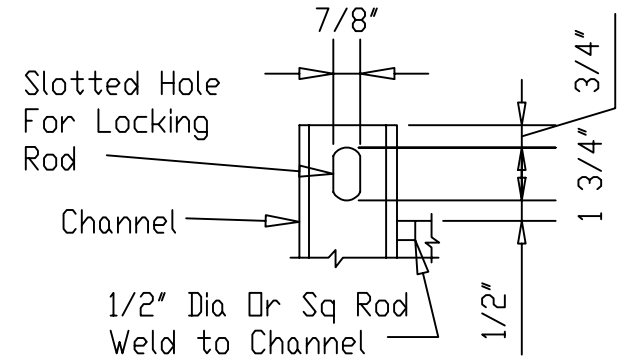

DETAIL A

INLET DETAILS

Stop Logs & 2"x 10" Planks Not shown

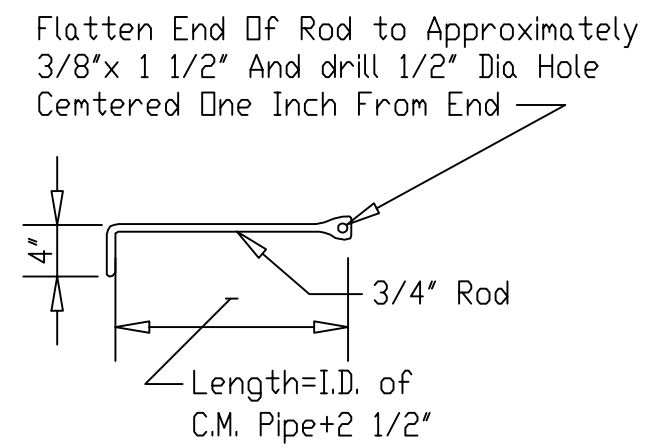

LOCKING ROD DETAIL

BILL OF MATERAIL

Inlet

___Lin ft. Half of Corrugated Metal Pipe
___Dia ___gage, assembled as shown in detail on this drawing.
___Cu. Yd. Concrete poured in place

Conduit

___Lin ft. Corrugated Metal Pipe
___Dia ___gage, consisting of:
1 Section (Riser Stub) 2'-0" Lin. ft.
___Section_____ Lin. ft.
1 Outlet Section_____20'-0" Lin. ft.
1 Flap Gate
2 Anti-Seep Diaphragm

Stop Logs

___Required- ___x___x___Long

Stop Log Lifting Hook

2 Required-See Detail

Locking Rod

1 Required-See Detail

Plank Walkway

2 Pieces 2"x10"x Dia. Riser + 9" long (over inlet)
2 Pieces 2"x10"x11'-3" long (walkway)
2 pieces 4"x4"x3'-0" long (caps)
2 pieces 4"x4"x3'-0" long (posts)
2 pieces 4"x4"x4'-6" long (posts)
4 Drift Pins 1/2" Dia. x 10" long (Posts to Caps)
12 Carriage Bolts 1/2"x3" long (planks to inlet)
8 Carriage Bolts 1/2"x7" long (planks to caps)

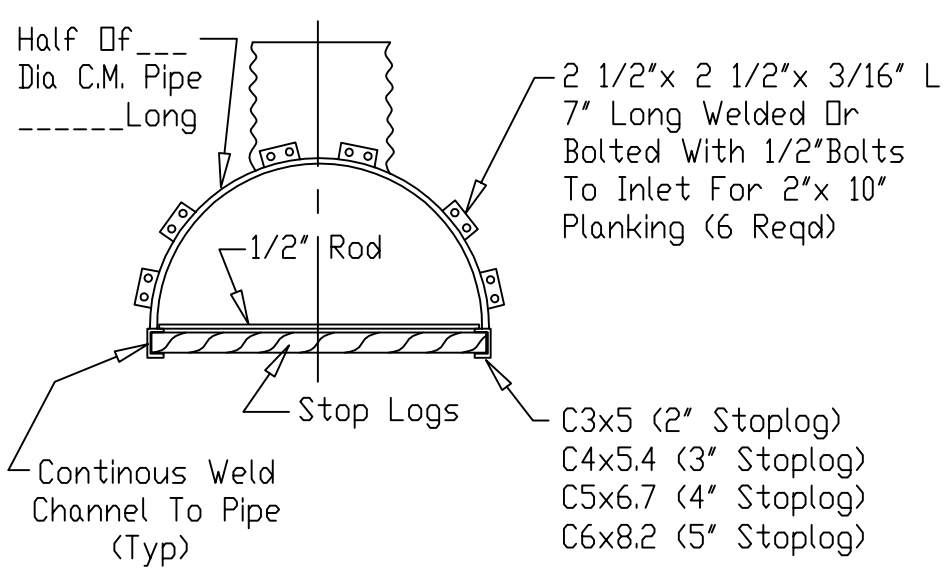

PLAN

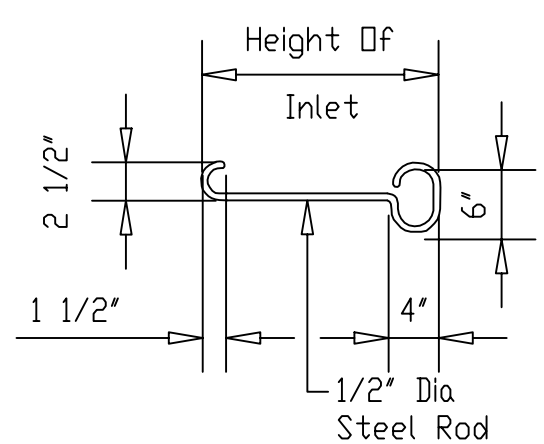

STOP LOG LIFTING HOOK

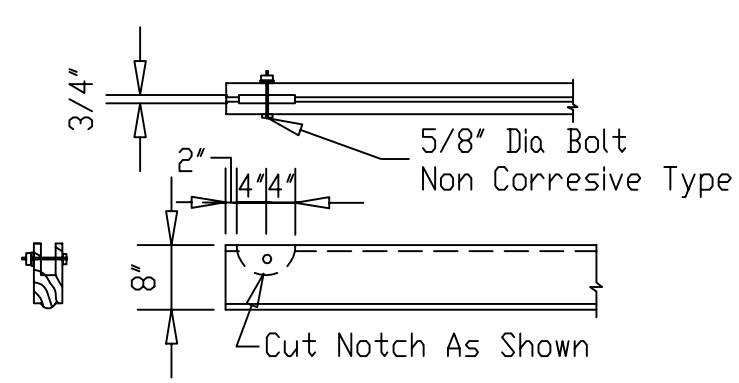

STOP LOG DETAIL

CONDUIT & RISER DIA. RELATIONSHIP	
Diameter In Inches	
Conduit	Riser
12	48
15	48
18	48
21	48
24	48
27	48
30	54
36	66
42	78
48	84

Date
Designed
Drawn M. QUINONES 2/00
Checked
Approved

WATER LEVEL CONTROL STRUCTURE

NRCS
Natural Resources Conservation Service
United States Department of Agriculture

File No. IL-ENG-164B
Drawing No.

Sheet 2 of 2

AUTOCAD2000